QTP/QSP Series Price Computing Scales

Features:

- Capacities from 6kg to 30kg
- 20 key embossed membrane keyboard
- Function include units conversion, 100 sets PLU, accumulation, give change
- OIML approve/EC type approve/model selectable (T7305)
- Battery provide up to 70 hours of continuous use (without backlight)

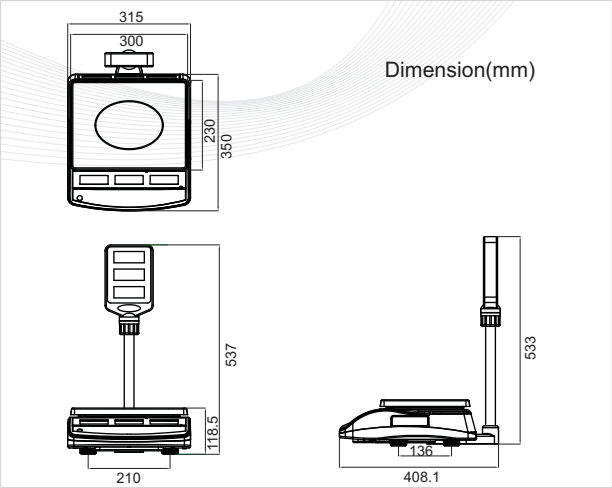

Options:

- RS-232 can connect to a printer or ECR

Specification:

Model	QTP	QSP
Display	Front and rear: 20mm LCD display, with backlight	Front and pole: 20mm LCD display, with backlight
Capacity	6kg, 15kg, 30kg	
Readability	1g/2g, 2/5g, 5/10g	
Pan size	230mm x 300mm SST pan	
Keyboard	20 keys	
Housing	ABS	
Max. Divisions	2x3000e	
ADC	Sigma delta	
ADC update	≤1/10 second	
Operate Temp	-10℃~+40℃	
Power	AC adapter (12V/500mA),built-in rechargeable battery (6V/4Ah)	
Gross weight	5.1kg	6kg

3